CHAPTER 118

THE LARGE SCALE DOLOS FLUME STUDY

George F. Turk and Jeffrey A. Melby[1]

ABSTRACT: In 1993, the U.S. Army Corps of Engineers, Waterways Experiment Station, Coastal Engineer Research Center conducted the Large Scale Dolos Flume Study (LSDFS) in order to investigate the structural response of concrete armor units. The study was primarily carried out in the large wave flume at the O.H. Hinsdale Wave Research Laboratory, Oregon State University. Over 300 model dolos units with a mass of 26 kg and a waist ratio of 0.32 were used. The units were cast from concrete. The instrumented dolosse were fitted with surface-mounted strain gages then subjected to a wide range of wave loading conditions. This strain gaging and the state-of-the-art data acquisition system increased the signal-to-noise ratio so that accurate measurements of static, quasi-static, wave-induced hydrodynamic, and unit-to-unit impact loading could be recorded. The LSDFS included a standard calibration series, static ramp tests, dry-land impact tests, and regular and irregular wave flume tests. Hydrodynamic instrumentation in the flume tests consisted of a very dense array of wave gages, current meters, runup-rundown gages, pore pressure transducers, hydrophones, digital video, and still photography in the nearshore zone. This paper presents previously unpublished details of the LSDFS specifically pertaining to instrumentation, calibration, dry-land impact tests, and some preliminary results of impact response captured in the flume tests.

INTRODUCTION

Dolosse are the dominant concrete armor units used on U.S. rubble-mound structures. They continue to be specified for new breakwater construction and for rehabilitation. Recent surveys by Corps researchers of concrete-armored breakwaters indicate an urgent need for concrete armor repair and rehabilitation design guidance (Melby and Turk 1994a). But, despite many concrete armor structural investigations during the last 20 years, there is still a general lack of knowledge of dolos structural

1) Research Hydraulic Engineers, Coastal Engineering Research Center, USAE Waterways Experiment Station, Vicksburg, MS, 39180

response. This is partly because of the complexity of the response with both the loading and boundary conditions being stochastic and highly variable and the wave loads not being currently analytically solvable. The inadequate knowledge is also due to the lack of a high accuracy strain measurement system for concrete armor.

Past efforts to measure the structural response of dolosse have included the Crescent City Prototype Study (Howell 1986), where 38-tonne dolosse were internally structurally instrumented. The Cresent City study provided a valuable data set of wave-induced hydrodynamic loadings at prototype scale which was used to calibrate a strain amplifying load cell for measuring dolos structural response at small scale (Markle 1989). But no impacts were recorded during this study and the static data set was limited to the 15 dolosse that were sampled. Also, the static data may have drifted over the course of the measurement period due to long term differential curing of the conrete.

Numerous dolosse small scale model experiments have been conducted by Scott et al. (1986), Anglin et al. (1989), Markle (1989), Melby et al. (1989), and Burcharth et al. (1991). Most of these studies used a load cell developed by or similar to that of the Canadians. While these efforts have contributed to the understanding of dolos structural response, all have proven less than satisfactory in determining the maximum stresses in dolosse. The load cell was calibrated for response to hydrodynamic loading by Markle (1989). But small scale load cell structural investigations are subject to scale and modeling effects, as discussed by Melby and Turk (1994b). For instance, calibration for static response is difficult because the small scale units have different surface friction than prototype units and static strains in load cell instrumented units are so small that they are very unreliable. Also, calibration for impact stresses has been done using uninstrumented drop test results (Burcharth 1991). These tests define failure as a specific crack width and relate the height dropped that produced this crack width to concrete cylinder compressive test strength. There are a large number of factors contributing to the uncertainty in these tests including fatigue effects from ever increasing drop heights, failure occuring at different locations on the units, armor unit strength being very different than the cylinder strength, incorrect estimation of cylinder tensile strength, and the load cell unit responding dynamically entirely differently than an uncut unit.

The Coastal Engineering Research Center's Large Scale Dolos Flume Study (LSDFS) provided an effective solution for quantifying the maximum stresses in dolosse. By using large scale concrete models instrumented with surface-mounted strain gages, direct strain measurements were made. This limited the required assumptions concerning the concrete response and added a degree of control not possible in prototype investigations.

LARGE SCALE DOLOS FLUME STUDY OVERVIEW

The pupose, goals, and experimental plan of the LSDFS, which began in 1991, are discussed in detail by Melby and Turk (1994b, 1994c) and will only be outlined herein. The large scale used was intended to minimize scale effects associated with flow forces, surface friction, materials, modeling, and instrumentation. The purpose of the study was to accurately and simultaneously measure dolos structural and hydrodynamic stability response. These data have been useful for verfying structural scaling criterion, developing design methods, and calibrating small scale model instrumentation. In addition, the results led to the development of a new concrete armor unit shape, the CORE-LOC ™ (Melby and Turk 1995). The technology developed during this study for

constructing, instrumenting, and collecting data will hopefully be helpful in future physical structural modeling. Finally, the data set will provide calibration for several numerical models under development at the CERC.

Besides accurate structural measurements of dolos response, measurements of real-time dolos movement, incident and reflected waves, and water particle velocities in front of the slope were also sought from the study. Dynamic dry-land tests were conducted to quantify impact response, and validate scaling using impact drop tests under idealized conditions. Dry-land static ramp tests were conducted to measure static stresses found in the dolos for a wide range of boundary conditions and several positions in the armor layer.

Model and Instrumentation Development

Approximately 300 concrete dolosse with a mass of 26 kg and a waist ratio of 0.325 were cast for the LSDFS (Figure 1). The most critical aspect of the LSDFS was the development of the Large Scale Instrumented Dolos (LSID). The LSID needed to be capable of detecting minute strains at a variety of locations on a dolos surface while maintaining integrity under the rigors of long-term underwater testing. Much discussion went into the planning of these units. Doubts were expressed that the strains produced, much of which would be below 20 $\mu\epsilon$, would even be measurable. Noise levels of less than 100 $\mu\epsilon$ were at one time considered good. The option of using a cut section and strain amplifying instrumentation was discussed but ultimately rejected. A cut dolos with a metal pipe inserted between the sections does not respond dynamically like an uncut dolos. As discussed above, identification of an apparent elasticity is very difficult.

<u>Dolos Concrete</u>.

Concrete Type:	Type I Portland Cement
Aggregate:	Coarse Sand
Density:	ρ = 2180 kg/m^3
Youngs Modulus:	E = 29 GPa
Poisson Ratio:	υ = 0.46
28-day Strength:	f$'_c$ = 54.8 MPa
Armor Unit Mass:	M = 26 kg
Armor Unit Volume:	V = 0.012 m^3

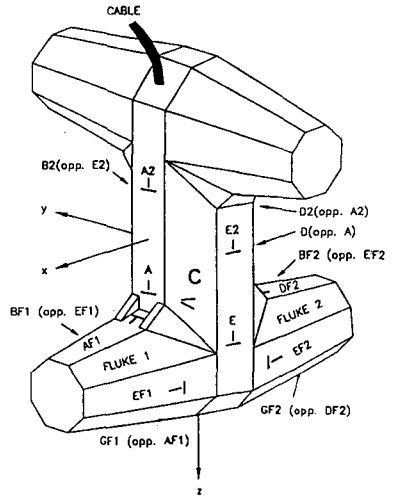

Figure 1. 26 kg instrumented dolos (LSID)

It was decided that surface-mounted strain gages, placed at up to 18 critical locations on the dolos shank and flukes (Figure 1), would be the the most successful instrumentation scheme. This scheme provided measurment of the exact surface strain

at the extreme fiber. Youngs Modulus was determined from concrete cylinder sample tests, and Hooke's law applied to get a precise surface stress. Load cells generally measure two moments and a torque. Using these load-cells in small-scale dolosse, two moments and torque are determined as a function of voltage output by hanging weights off the end of the dolos. These gross responses are based on differencing the voltage across the wheatstone bridge circuit. For load cell instrumented units, a linear stress distribution must be assumed, with equal magnitudes of compressive and tensile strains at the extreme fibers. But Melby et. al. (1989) showed highly non-linear stress distributions in dolos shank sections under static loading, even for low stress levels, due to the abrupt changes in sectional shape. Therefore, the linear cross-sectional stress distribution assumption will always produce an unquantifiable error. In the LSDFS, by measuring the individual strains on opposite sides of a section, we can directly measure the compressive and tensile extreme fiber strains and use Hooke's Law to compute stress.

By casting the LSIDs out of sand aggregate concrete, the strain gages could be placed directly on the prepared concrete surface without concern that a gage would be placed on an undetected aggregate stone. But one of the compromises that had to be made was the need for extensive waterproofing and impact protection (Figure 2a) for the surface-mounted gages (Figure 2b). Dry-land tests showed that, if a LSID impacted another LSID on the waterproof covering, the impact strain amplitude could be attenuated by up to 40%. This was a great concern during the flume tests. Fortunately, rarely

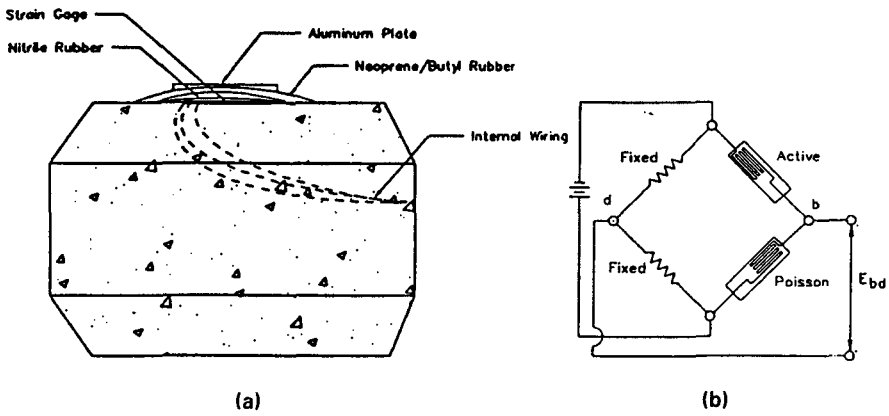

Figure 2. (a) Waterproofing and protection for (b) surface mounted strain gages

during the testing were impacts directly on the waterproofing evident. This was because the units generally impacted on the fluke ends, falling like a hammer. The waterproofing procedure was tedious and time consuming; but it was important because water intrusion into the instrumentation could cause gage drift and gage failure. Waterproofing integrity tests were done over the period of several weeks by soaking the LSIDs in tubs filled with water. During the waterproofing testing, the instrumentation showed minute and acceptable degrees of gage drift as shown in Figure 3.

The final strain gage layout consisted of 350 Ω, 1.25 cm foil gages set in a Wheatstone half bridge configuration (Figure 2b). By using a Poisson gage, signals were temperature compensated and amplified 10% to 30%. The waterproofed gages were capable of detecting strains on the surface of the concrete dolosse with a resolution of one

micro-strain ($\mu\epsilon$) peak-to-peak and a variable range of around 1000 $\mu\epsilon$. The high resolution was required for accurate measurement of strains due to static and hydrodynamic loads and the large ranges for measurement of static, quasi-static, and impact strains simultaneously. A total of seven dolosse were instrumented with up to 18 of these strain gages.

Other aspects of the model dolosse, instrumentation, and data acquisition system, including the details of molding the dolosse, the strain gaging development, and the data acquisition hardware specifications are given in Melby and Turk (1994c).

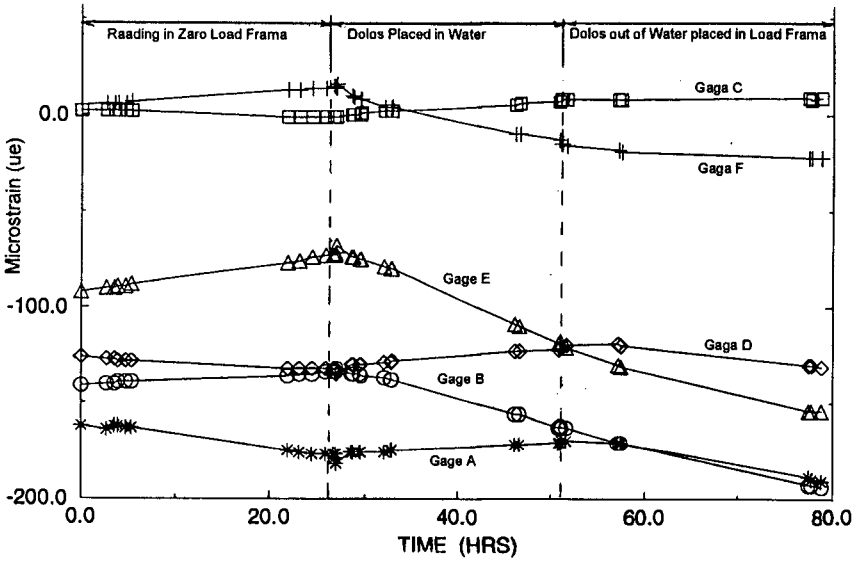

Figure 3. Typical waterproofing test results

Dolos Calibration

The purpose of conducting an extensive bench test program for the instrumented dolosse was to check the strain gages and bridge circuitry and to quantify the amplification of the Poisson gages. By applying known torsion and bending moment loads to the dolos units and knowing the Youngs Modulus, strain readings obtained from each of the bridge circuits were compared against theoretical values derived by combining simple beam theory and Hooke's Law. The strain was analytically calculated for bending as

$$\epsilon = \frac{FL}{0.0956 d^3 E} \tag{1}$$

and for torsion as

$$\epsilon = \frac{16FL(1+\mu)}{\pi d^3 E} \tag{2}$$

Here ϵ is strain, F is the applied load, L is the moment arm, d is the distance between opposing faces of the dolos section, E is Youngs Modulus, and μ is the Poisson Ratio. Table 1 shows typical results of the static calibration, where measured stains were compared to analytically-calculated strains. The LSID measurements were at a maximum within 10% of the theoretical values.

Table 1. Typical results of dolos bench test

Load (N)	Bending Gage			Torsion Gage		
	Estimated Strain ($\mu\epsilon$)	Actual Strain ($\mu\epsilon$)	Percent Error (%)	Estimated Strain ($\mu\epsilon$)	Actual Strain ($\mu\epsilon$)	Percent Error (%)
45	4.1	4.5	+9.8	2.9	2.8	-3.6
67	6.2	6.5	+4.8	4.4	4.5	+2.3
89	8.3	8.5	+2.4	5.9	5.8	-1.7
134	12.4	11.5	-7.8	8.8	8.8	0
178	16.5	16	-3.1	11.7	11.8	+0.9
223	20.7	20	-3.5	14.7	14.8	+0.7
267	24.8	24.5	-1.2	17.6	17.8	+1.1
312	28.9	28	-3.2	20.6	20.5	-0.5
E = 29 Gpa , Moment Arm = 61 cm, Width of Shank = 13.8 cm						

Flume Setup

The OSU flume used for the LSDFS measured 104 m x 3.7 m and is 3.7 m deep (Figure 4a). The waves were generated by a flap-type wavemaker with active reflected wave suppression. The flume was fitted with an instrumentation carriage and had a configurable foreshore slope.

The flume instrumentation (Figure 4b) and data acquistion system included:

1) VAX-based 64-channel DAS
2) Time code generator linking all data acquisition devices with atomic clock
3) 4-three-axis current meters
4) 4-electro-resistive wave gages
5) 2-electro-resistive runup/rundown gages
6) 8- pore pressure transducers
7) 2-surface video cameras
8) 2-underwater video cameras
9) 2-underwater microphones
10) 2-35mm still cameras

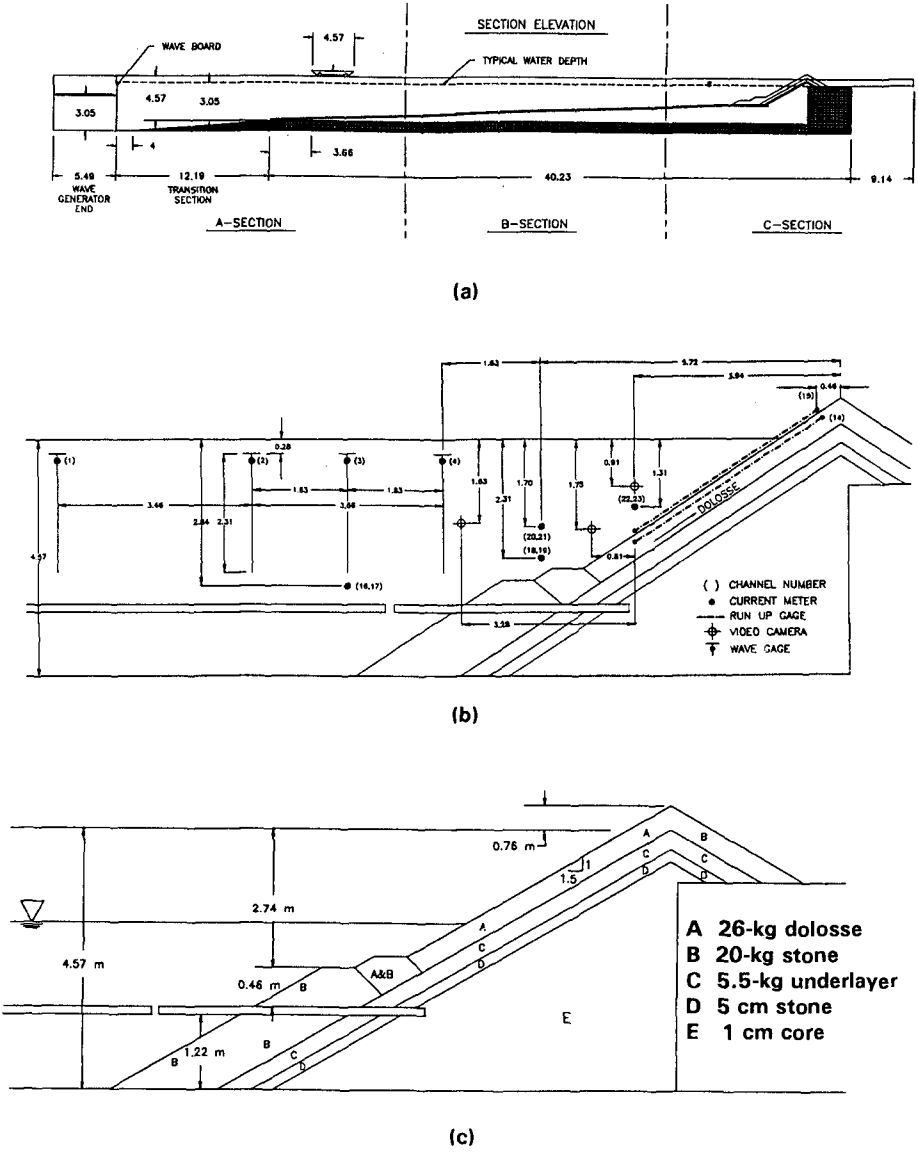

Figure 4. (a) Flume Layout. (b) Instrumentation. (c) Cross-section

Approximately 300 uninstrumented dolosse and up to seven LSIDs were placed on a 1V:1.5H structure slope (Figure 4c). The units were placed with a packing density of $\phi = 0.83$, a layer coefficient of $K_\Delta = 0.94$, and a porosity of $P = 56\%$. Using these parameters, 15 dolosses were placed per square meter of surface area.

PRELIMINARY RESULTS

Static Ramp and Dynamic Drop Tests

Results of the static ramp tests have been previously discussed in detail by Melby and Turk (1994b, 1994c). The ramp tests included 84 rebuilds on a 1V:1.5H slope. Strain measurements were taken with the slope flat, sloped, sloped and nested (vibrated), and flat again. The static ramp tests produced an overall non-dimensional static mean tensile stress, $\sigma/\rho g C$, of 15.2 with a standard deviation of 9.0, where g is the acceleration of gravity, ρ is the concrete density of 2180 kg/m^3, and C is the dolos fluke length of 43 cm.

The dynamic drop tests were conducted in the usual manner (Figure 5) with nine incremental centroidal drop heights from 0.035 to 1.98 cm. The dolosse were dropped on a structural concrete base over 1 meter thick. It was assumed that this base did not absorb an appreciable amount of energy.

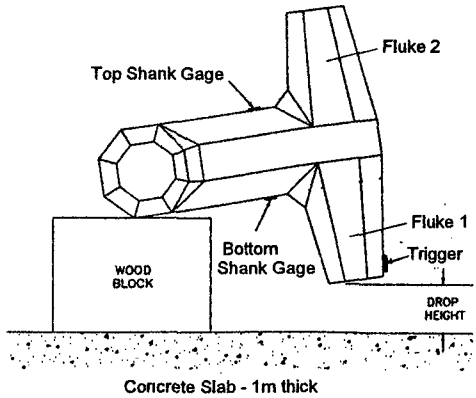

Figure 5. Standard drop test configuration

Two LSIDs were used (Figure 1) and 5 drops were performed at each of the nine heights on each end of the instrumented fluke. Figure 6 shows a typical impact signal recorded from the four gages located about the dolos shank. Figure 6(a) shows signals from gages A and D, located on the top and bottom of the shank. Here most of the vibrational energy is in the fundamental flexural vibration mode. Figure 6(b) shows signals from gages B and E, located on the sides of the shank where little straining occurs. These signals show that the dolos is in almost pure in-plane bending, with no out-of-plane bending or torsion introduced from the test procedures.

Figure 7a shows the maximum strains recorded during each drop from the four shank gages (gages A,B,D,E). In Figure 7, the absissca is the ratio of the centroidal

drop height, h, to the dolos fluke length, c. Figure 7b shows maximum strains recorded from eight of the fluke gages (gages AF1,BF1,EF1,GF1,BF2,DF2,EF2,GF2). The raw data show consistent amounts of scatter between different drop heights. However, when observing the coefficient of variation (standard deviation divided by the mean), as plotted against the non-dimensional drop height (Figure 8), a greater degree of scatter becomes apparent at the lower drop heights. This is expected, as imperfections in the impacting face made accrurate repeatability almost impossible for the smallest five drop heights

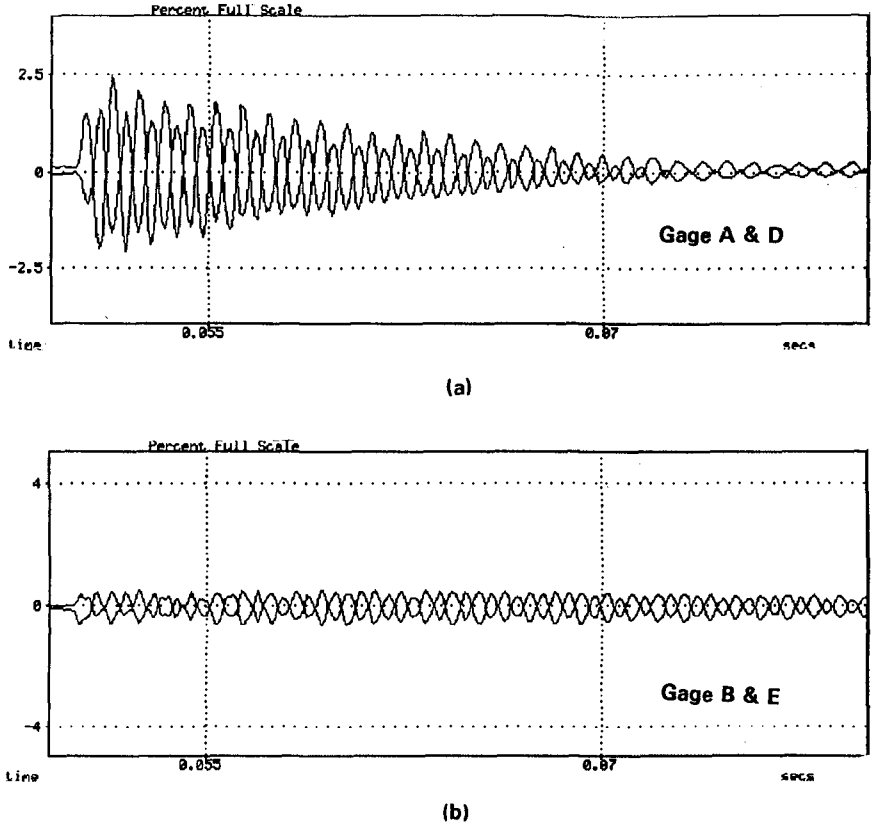

Figure 6. Typical impact signal. (a) signal from top and bottom gages. (b) signal from side gages

(h/C = 0.0008 to 0.005). But the region of interest in the drop tests is over those drop heights in the fully elastic range; in this case, the upper four drops. Figure 9 shows the results of a linear regression through these non-dimensional stresses as a function of the squart root of the non-dimensional centroidal drop heights for both the shank and fluke. Theory indicates that the magnitude of impact stress is proportional to the square root of the drop height (Burcharth 1981, Melby and Turk 1994b), and these results support this impact scaling law reasonablely well. The impact stresses found in the flukes also follow this scaling but are approximately 80% of those found in the shank.

The results indicate that impact stress scaling is proportional to the square root of the characteristic length scale, but the magnitudes of the impact stresses are significantly larger than those reported from prototype failure tests (Burcharth 1991). As discussed in Melby and Turk (1994b), this difference is very likely due to the weaknesses in uninstrumented prototype destructive dolos field tests, as discussed above. The prototype dolosse were dropped several times before cracks could be seen. Initial cracking and cylinder strength were used to define impact stress. Uncertainty in these tests can be due to scatter in levels and types of failure stresses, differences in the stiffness of the impacted bases for the various tests, failure stresses being not necessarily similar to test cylinder failure stresses, and assumptions about the actual strength and elasticity of the concrete at the time of the drop test.

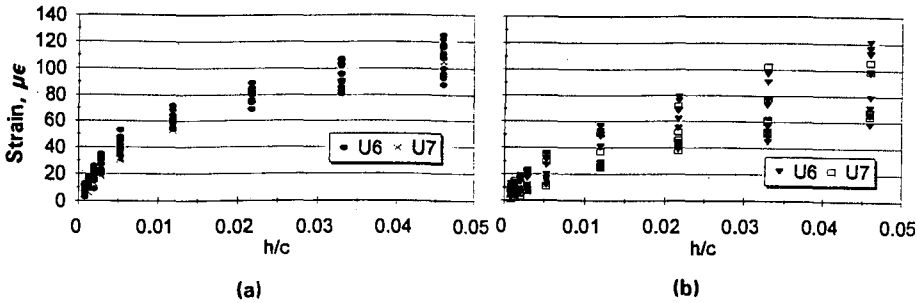

Figure 7. Record of all strains measurements from 9 drop heights. (a) Shank. (b) Fluke

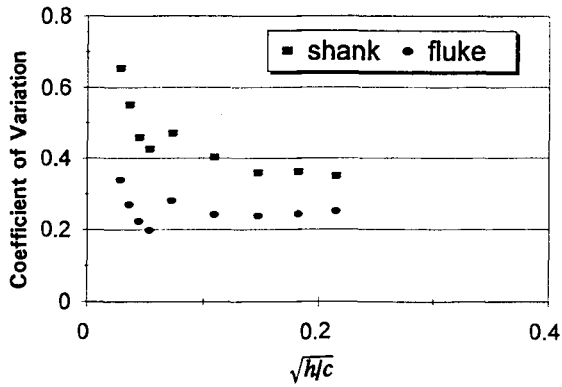

Figure 8. Coefficient of Variation for impact stresses in shank and fluke

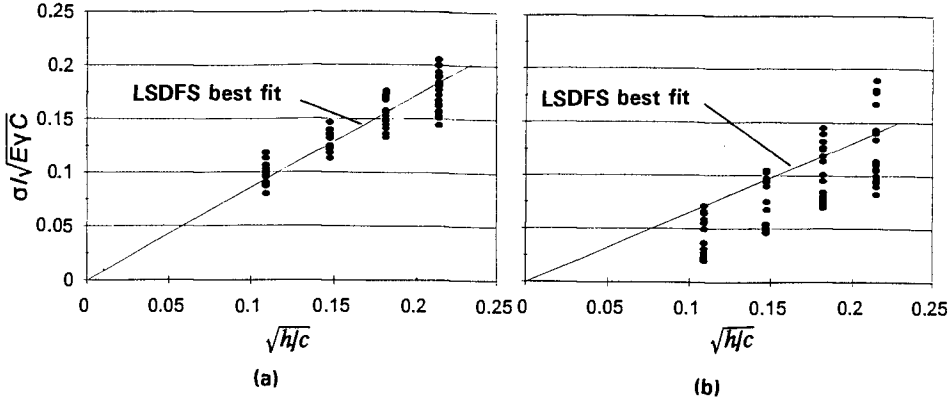

Figure 9. Nondimensional impact stress vs. Nondimensional centroidal drop height. (a) Shank. (b) Fluke

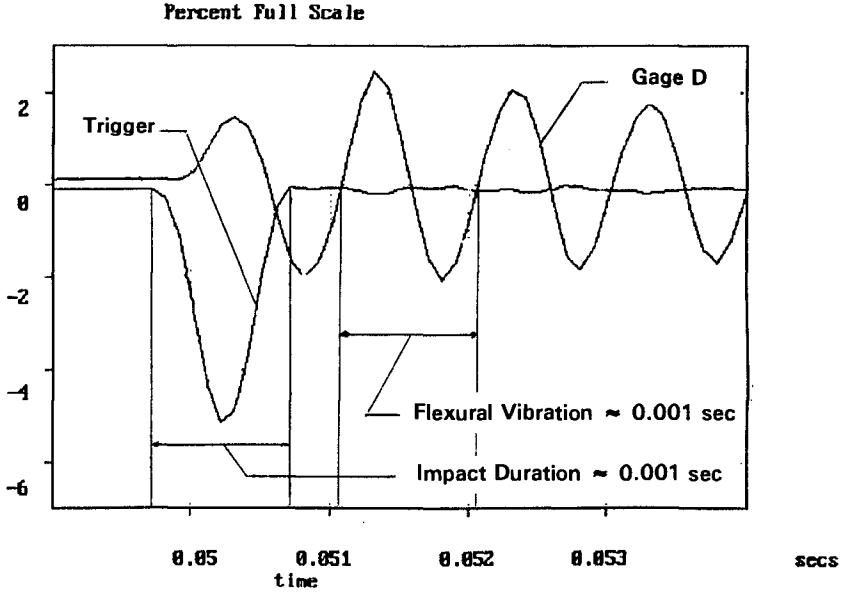

Figure 10. Comparsion between impact duration recorded by trigger and flexural vibration recorded by top mounted strain gage (Gage D)

Melby and Turk (1994b) stated that the impact duration is governed predominately by the by the flexural response of the dolos. The impact duration was measured directly from a tip mounted strain gage. Figure 10 shows a raw data plot of a impact single from a drop height of 0.23 cm. The figure shows the duration of impact from the trigger to be nearly identical to the period of vibration recorded from a shank-mounted strain gage. This validates that the impact duration is governed by the flexural bending response of the unit and is equal to the inverse of the fundamental frequency of flexural vibration of the unit.

Preliminary Flume Test Results

The intent of the flume tests was to quantify the maximum stresses in dolosse under wave loading. The model dolosse were sized based on small-scale model hydraulic stability tests results and the limitations of the wavemaker. The range of wave heights for the flume tests was chosen to produce a range of Hudson stability numbers, N_s, up to 4.6 (K_D's up to 64). From the small-scale model testing, it was expected that dolos movement would achieve an upper limit of 4% rocking. In the small scale-tests, it was found that, at wave heights corresponding to $N_s < 2.3$ ($K_D < 8$), the dolosse generally do not move. At wave heights between $N_s = 2.3$ and $N_s = 2.9$, dolosse that are not interlocked start to rock about on the slope. For Ns > 2.9, the movement of dolosse on slope becomes more unpredictable. Increasing the wave height may cause dolos to rock more violently, to move out of their original positions, groups of dolosse may become mobile, or the whole slope may slump.

The LSDFS dolosse, made from concrete, proved to be surprisingly more stable than their small-scale counterpart. Although it was previously felt that small scale models had little scale effects, the LSDFS tests showed dolosse stable up to $N_s = 4.6$. It was a rare case that 2% of the dolosse were rocking, and in general, for the more severe wave cases, only 1% rocking was observed. It was felt at the time that the higher surface friction on the large scale units caused the higher stability.

At present, a preliminary analysis of select records from the large volumes of impact data generated by the LSDFS (over 4 GB) has been accomplished. Impact response was recorded during 136 flume tests, and 10% of the impact records have been analyzed to-date. The records analyzed were from tests performed with monochromatic waves with periods ranging from 3 to 5 sec and wave heights to 1.4 m. The water depth for these tests was 1.5 meters.

Several plots are presented to show correlation, or the lack thereof, between impact stress and several typical wave parameters. In Figure 11a, the nondimensional impact stress, $\sigma/(E\gamma C)^{1/2}$, has been plotted against relative wave height, H/d, where H is incident wave height and d is depth. In general, one would expect the magnitudes of the impact stresses to increase with wave height; but little correlation has been found. Observing the tests, the authors noted that, for units with unstable boundary conditions, impacts occur at given wave particle velocities, regardless of the amount of incident wave energy. So, while it is certainly true that larger waves have more capacity for loosening stable armor units, waves below a given threshhold have little capacity for loosening stable units and impact stresses will not, in general be a function of wave height. The data indicate that the stresses are related to the threshhold of movement.

Figure 11b shows impact stress as a function of wave steepness, H/L_o, where L_o is the deep water wavelength. Stresses do not appear to be a funtion of the wave length.

Figure 11c shows impact stress as a function of Stability Number, N_s. This plot is similar to Figure 11a. The maximum stresses recorded were higher for the larger wave heights and higher stability numbers; but, in general, the mean stress and the mean stress plus one standard deviation was approximately the same for N_s between 3.0 and 5.0. Finally, the impact stresses are plotted as a function of the surf similarity parameter, $tan\alpha/(H/L_o)^{1/2}$, (Figure 11d), where α is the structure slope angle. The effects of breaker

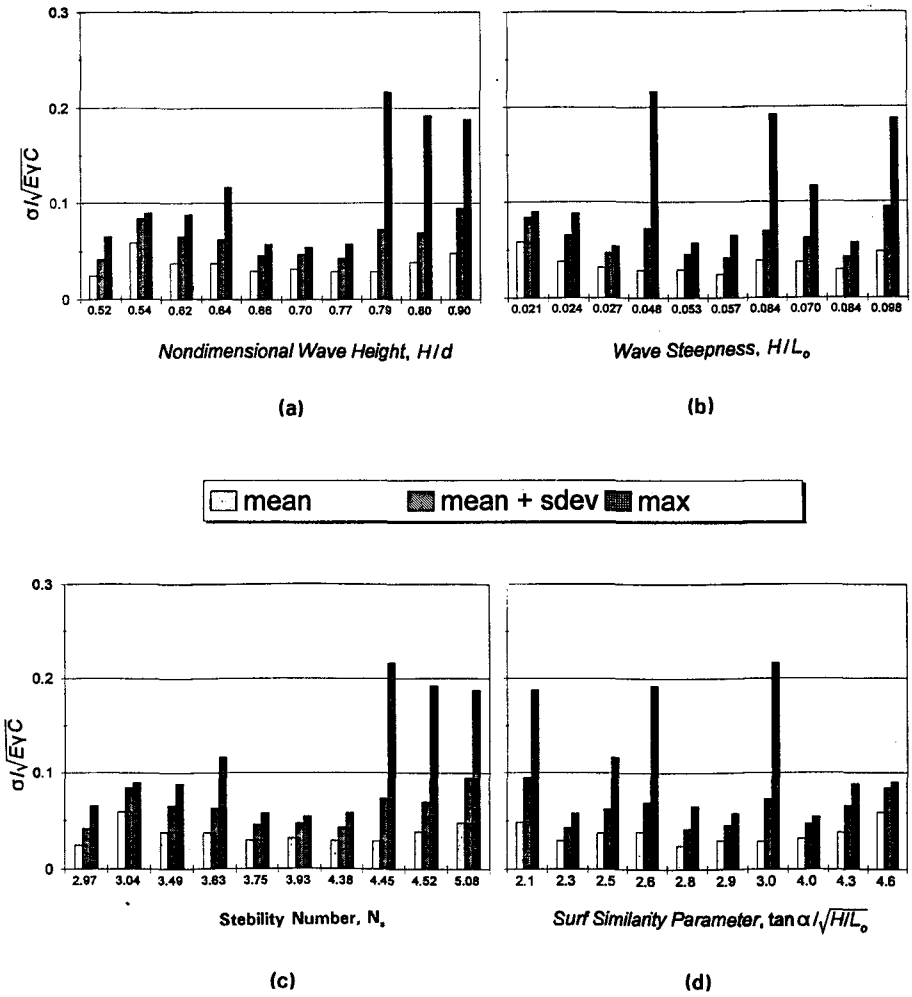

Figure 11. Nondimensional impact stress vs. (a) nondimensional wave height. (b) wave steepness. (c) Stability Number. (d) Surf Similarity Parameter.

type do not seem to effect the magnitudes of the impacts, with stress values approximately the same for both plunging and collapsing breakers.

At this point in the data analysis, trends are difficult to ascertain. It would be expected that large wave heights, plunging waves, and high energy content would all contribute to producing the largest impact stresses; but initial observations of the data do not show this to be the case. It seems that the magnitudes of the stresses are more predicated on the boundary conditions. The less stable the boundary conditions the more likely high impact stresses will occur, even in moderate wave conditions. This seems to allude to the fact that the integrity of a dolos armor slope is largely based on proper construction techniques, where no units are placed on slope without adjacent interlocking, as discussed by Melby and Turk (1994a).

This is made more significant by the magnitude of the impact stress over the broad range of wave conditions. While the tensile strength of concrete dolosse used in the LSDFS was approximately $f't = 5.5$ MPa (or a nondimensional strength $f't/(E\gamma C)^{1/2} = 0.34$), 12 dolosse were broken by wave action during the course of the experiment. Many dolos prototype structures have used concrete with tensile strengths around $f't = 3.5$ MPa and have length scales of 5:1 to 8:1 relative to the LSDFS dolos. If the concrete strength for LSDFS has been scaled by these critera and the impact scaling law, the reduced tensile strength for the LSDFS dolos would have been $f't = 1.2$ to 1.6 MPa or $f't/(E\gamma C)^{1/2} = 0.07$ to 0.1. And in many cases, the mean impact stress plus standard deviation approaches or exceeds these values over the range of wave conditions. Also, in many of the records analyzed, the maximum stresses recorded are double this reduced tensile strength. The main point is, for unreinforced dolosse, unit-to-unit impact loading should not be permitted unless the resultant damage is deemed acceptable.

SUMMARY AND CONCLUSIONS

The LSDFS allowed accurate measurement of structural response and quantification of the maximum stresses in dolosse for a wide range of boundary and loading conditions. The tests indicated that when a dolos nears its hydraulic stability threshold, at least 1%-2% of the units are rocking on slope. This rocking, and the associated unit-to-unit impact, produces impact stresses that, when combined with static and wave induced hydrodynamic stresses, can often be high enough to exceed the concrete strengths typically found in prototype dolosse. This can result in higher breakage levels than anticipated by conventional design. For even modest waves produced in the LSDFS, maximum tensile strains often exceeded 80 $\mu\epsilon$. Scaled to prototype and converted to stress using Hookes Law and a dynamic modulus, these stresses would far exceed prototype concrete strength.

While data reduction and analysis of the sustantial data set is ongoing, it is anticipated that these data will be incorporated into the Corps' probabilistic, reliability-based design program for concrete armor units, *PCARMOR*.

ACKNOWLEDGEMENT

The work described in this paper was conducted as part of the Repair, Evaluation, Maintenance and Rehabilitation Research Program of the U.S. Army Engineer Waterways Experiment Station, US Army Corps of Engineers. The authors would like to express their gratitude to the following individuals for their contributions, comments,

and review of the LSDFS: Prof. Charles Sollitt, Oregon State University, Prof. Joseph Tedesco, Auburn University, Prof. Hans Burcharth of Aalborg University, Denmark, Mr. Joop Zwamborn from South Africa, and Prof. Fred Raichlen of the California Institute of Technology, Mr. Thomas Kendall, USAE San Francisco District, and Prof. Nobu Kobayashi of the University of Delaware. Permission to publish this paper was granted by the Chief of Engineers.

REFERENCES

Anglin, C.D., et al., (1989). "The development of structural design criteria for breakwater armor units." *ASCE/WPCOE Sem. on Stres. in Conc. Ar. Un.*, ASCE, NY, NY.

Burcharth, H.F., (1981). "Full-scale dynamic testing of dolosse to destruction." Coastal Engr., Vol. 4

Burcharth, H.F., et al., (1991). "On the determination of concrete armor unit stresses including specific results related to dolosse." Coastal Engr., Vol. 15

Howell, G.L., (1986). "A system for the measurement of the structural response of dolos armour units in the prototype." *The Dock and Harbor Auth.*,67(779)

Markle, D.G., (1989). "Crescent city instrumented dolos model study," *ASCE/WPCOE Sem. on Stres. in Conc. Ar. Un.*, ASCE, NY, NY.

Melby, J.A., et al., (1989). "An analytical investigation of static stresses in dolosse." *ASCE/WPCOE Sem. on Stres. in Conc. Ar. Un.*, ASCE, NY, NY.

Melby, J.A. and G.F Turk, (1994a). "Concrete armor unit performance in light of recent research results." *ASCE/WPCO Sem. on Case Histories of Design, Constr., and Maint. of Rubble Mound Struc.* ASCE, in publication

Melby, J.A. and G.F Turk, (1994b). "Scale and modeling effects in concrete armor experiments," ASCE *Proc. 1st Int. Conf. on Role of L.S. Exp in Coas. Res.*, ASCE, NY,NY

Melby, J.A. and G.F Turk, (1994c). "Large scale dolos flume study: Post-experiment report." *USAE WES TR-94-?*, in press, Vicksburg, MS, 39180

Melby, J.A. and G.F Turk, (1995). "The CORE-LOC: optimized concrete armor." *Proc. 24th Int. Conf. on Coast. Engr.*, ASCE, NY, NY., in publication

Scott, R.D., Turke, D.J., Baird, W.F., (1986). "A unique instrumentation scheme for measuring loads in model dolos units," *Proc. 20th Int. Conf. on Coast. Engr.*, ASCE, NY, NY.

KEY WORDS: Rubble mound breakwater, concrete armor units, Dolosse, load-cell, strain gage